FEATURES

- Fast Charge Control of NiMH/NiCd Batteries, even with a Fluctuating Charging Current.
- Fast Charge Termination by: $\Delta T/\Delta t$, $-\Delta V$, $0\Delta V$, Safety Timer, Maximum Temperature, Maximum Voltage.
- Linearly Adjustable $\Delta T/\Delta t$ Detection Slope and Safety Timer.
- Adjustable Peak Voltage Timer for $0\Delta V$.
- Battery Voltage Protection Range Selectable.
- Selectable Battery Temperature Protection Mode.
- Protection against Battery Voltage and Battery Temperature Faults.
- Selectable LED Display Mode for Battery Status.
- Five Pulsed Trickle Charge Modes.
- Discharge-before-Charge Function Available for Eliminating Memory Effect.
- Quick and Easy Testing for Production.
- 16-pin DIP or SO Packages.

APPLICATIONS

Battery Fast Chargers for:

- Mobile Phones.
- Notebook and Laptop Personal Computers.
- Portable Power Tools and Toys.
- Portable Communication Equipments.
- Portable Video & Stereo Equipments.

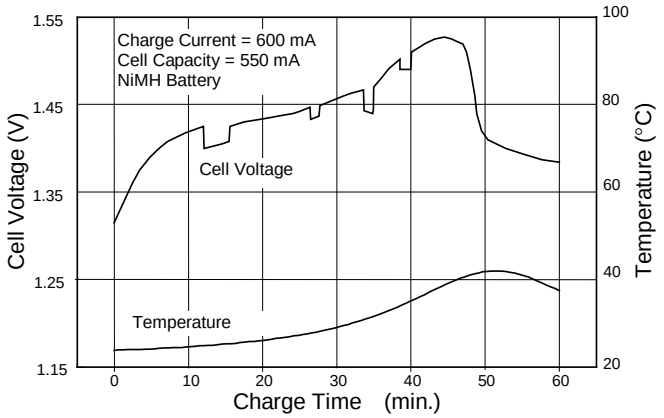

Fig. 1 Battery Charging Characteristics Resulting from an AIC1781-Controlled Charger with a Fluctuating Charging Current

DESCRIPTION

The AIC1781 fast charge controller IC is designed for intelligent charging of NiMH or NiCd batteries without the risk of overcharge. $-\Delta V$ detection (-0.25%), $0\Delta V$ detection (peak voltage timer) and $\Delta T/\Delta t$ detection are the primary methods employed by the AIC1781 to terminate fast charge. The fast charge can also be cut off by maximum battery voltage and maximum battery temperature detection along with the safety timer to prevent charging under fault conditions of the charging system or the battery itself.

Both $\Delta T/\Delta t$ and $-\Delta V$ detection methods have been proved powerful in terminating fast charging for NiMH and NiCd batteries. The AIC1781 utilizes the combination of these two methods to achieve reliable decision of ending fast charge and prevent misaction caused by using $-\Delta V$ detection alone under certain conditions. Fig. 1 shows an example of charging curve of a battery charged by a fluctuating current from a NiMH battery charger which uses the AIC1781 controller IC to achieve optimal charging. This technique, in cooperating with the $0\Delta V$ detection (peak voltage timer), is particularly suitable for NiMH batteries, whose voltage drop is hardly significant yet temperature rises rapidly. The $\Delta T/\Delta t$ or $-\Delta V$ detection circuitry may be disabled independently for different applications, such as system-integrated chargers, chargers with varying charge current, or battery packs lack of temperature sensing thermistor.

The safety timer period, mode of battery temperature protection, battery voltage protection range, pulsed trickle charge duty, and LED display mode are all adjustable or selectable. Discharge-before-charge function is included to get rid of memory effect of NiCd batteries without the risk of overdischarging. Test mode is provided for charger manufactures to dramatically reduce production test time.

TYPICAL APPLICATION CIRCUIT

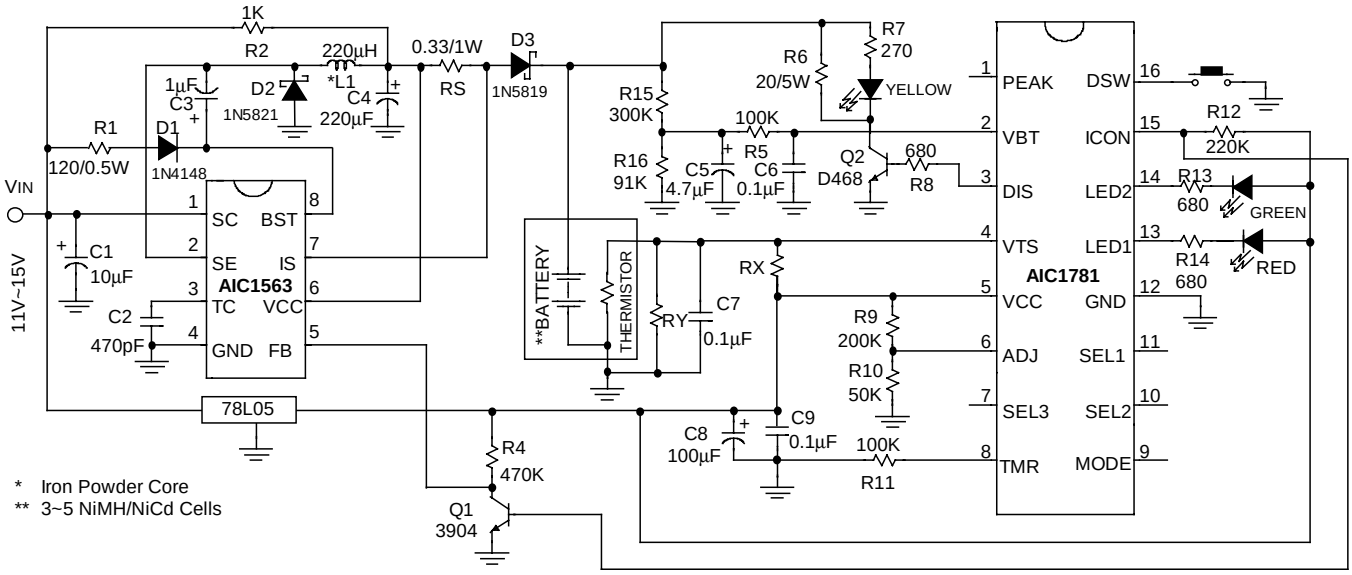

NOTE : CHARGE CURRENT = 0.3V/RS Ampere.
SAFETY TIMER = 80 min.
$\Delta T/\Delta t$ = 1°C/min.

Battery Charge Circuit for Fluctuating Charging Current Application

ORDERING INFORMATION

AIC1781XX

- PACKAGE TYPE
  N: PLASTIC DIP
  S: SMALL OUTLINE
- TEMPERATURE RANGE
  C= 0°C~70°C

ORDER NUMBER	PIN CONFIGURATION
AIC1781CN (PLASTIC DIP)	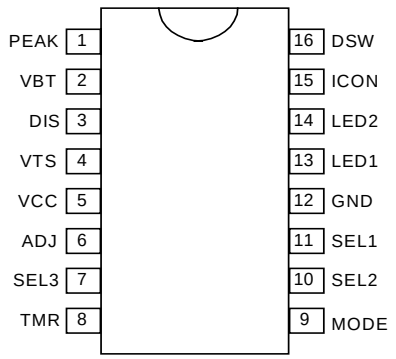
AIC1781CS PLASTIC SO)	

ABSOLUTE MAXIMUM RATINGS

Supply Voltage 5.5V

DC Voltage Applied on any pin 5.5V

Sink current of ICON pin, LED1 and LED2 pin 20mA

Operating Temperature Range ..... 0°C~ 70°C

Storage Temperature Range ..... -65°C~ 150°C

TEST CIRCUIT

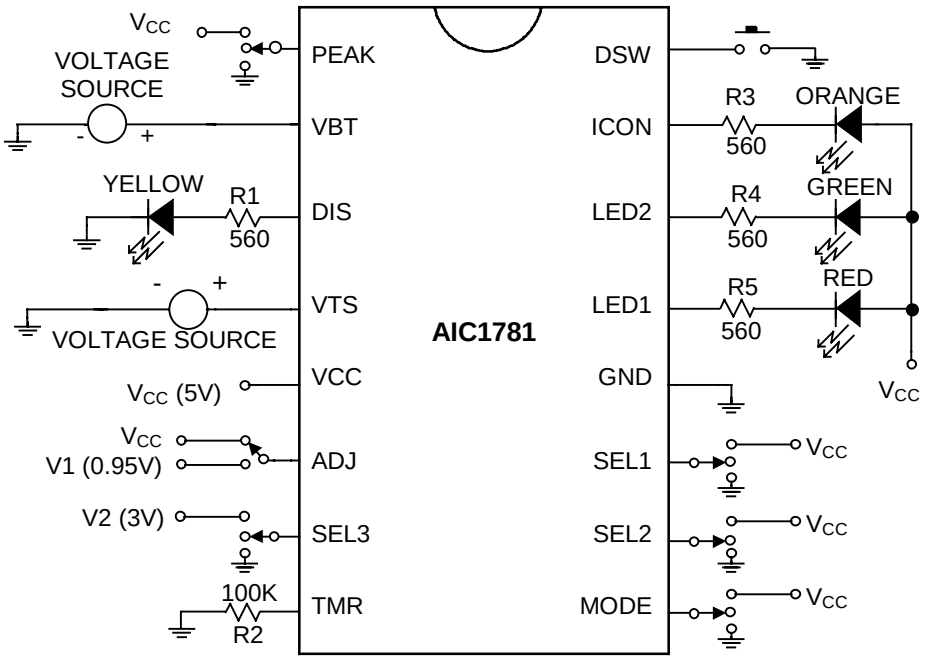

ELECTRICAL CHARACTERISTICS (Ta=25°C, V_{CC}=5V, unless otherwise specified.)

PARAMETER	TEST CONDITIONS	SYMBOL	MIN.	TYP.	MAX.	UNIT
Supply Voltage		V_{CC}	4.5	5.0	5.5	V
Supply Current		I_{CC}		1.1		mA
Voltage Protection Limit	Battery Low During Initial Timer After Initial Timer (SEL3>3V) (SEL3<2V) Battery High (SEL3>3V) (SEL3<2V)	V_{BT}	 0.11 0.63 1.1 2.6 1.9	 0.16 0.69 1.2 2.7 2.0	 0.21 0.75 1.30 2.80 2.10	V
Temperature Sense Limit	Temperature High Temperature Low	V_{TS}	1.35 3.5	1.45 3.6	1.55 3.70	V
Output impedance of DIS Pin		Z_{DIS}		140	250	Ω

■ ELECTRICAL CHARACTERISTICS (Ta=25°C, V_{CC}=5V, unless otherwise specified.)

PARAMETER	TEST CONDITIONS	SYMBOL	MIN.	TYP.	MAX.	UNIT
Output Impedance	LED1, LED2, ICON Pins ON OFF		 1	 25 	 50 	 Ω MΩ
Source Current Capability	SEL3 pin DSW pin	I_{SEL3} I_{DSW}		5.5 16		μA
Input Impedance	MODE, PEAK, SEL1, SEL2 pins VBT, VTS, ADJ pins		 1	300 		KΩ MΩ
Recommended External Resistor of TMR pin		R_{TMR}	2	100	1000	KΩ
-ΔV Detection Level w.r.t.* Peak Value				-0.25		%

w.r.t. : with respect to

■ TYPICAL PERFORMANCE CHARACTERISTICS (Ta=25°C, R2=100KΩ, V_{CC}=5V, refer to Test Circuit)

Supply Current vs Supply Voltage

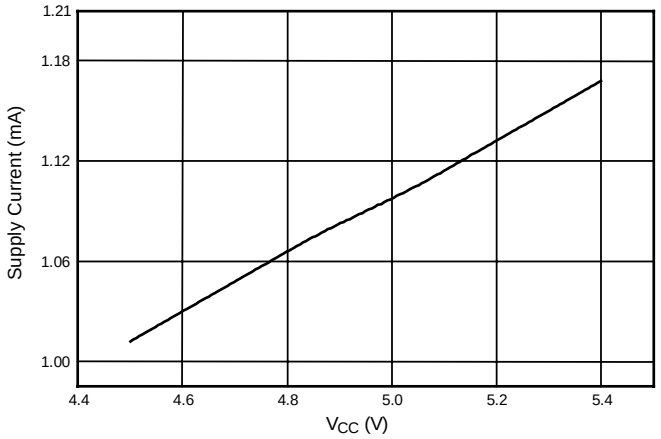

Safety Timer vs Supply Volatge

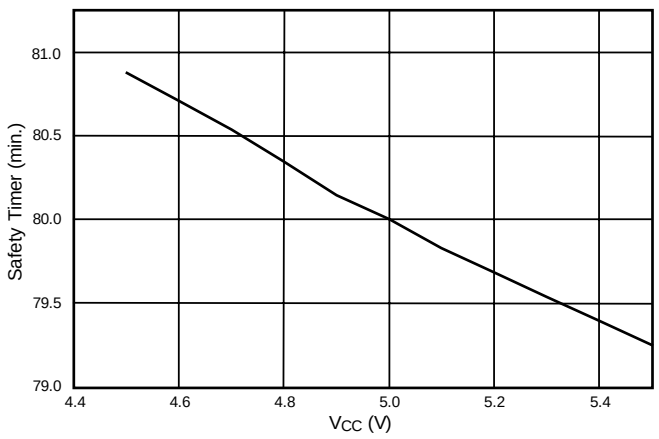

TYPICAL PERFORMANCE CHARACTERISTICS (CONTINUED)

LED Flashing Frequency vs Supply Voltage

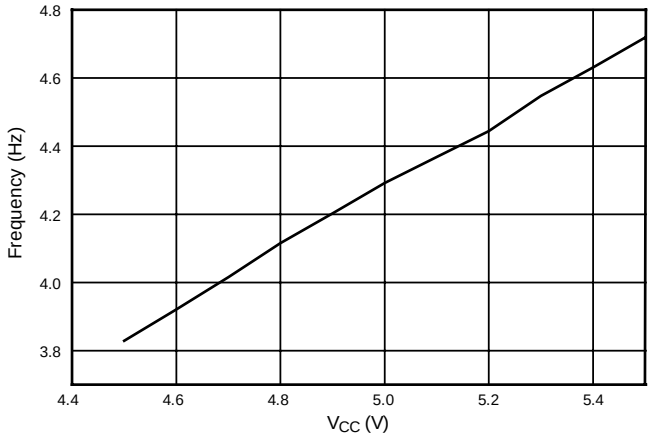

Supply Current vs Temperature

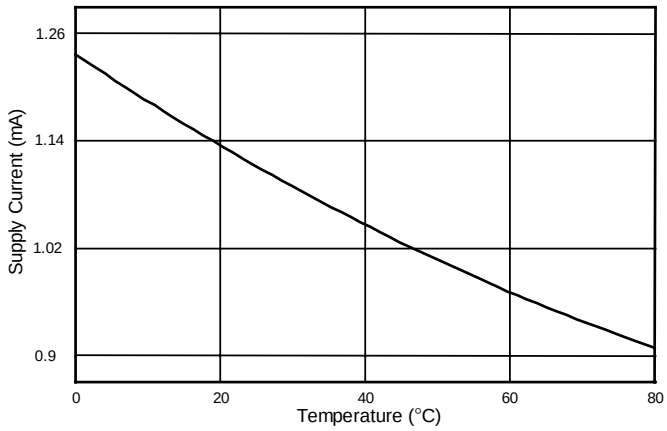

Safety Timer vs Temperature

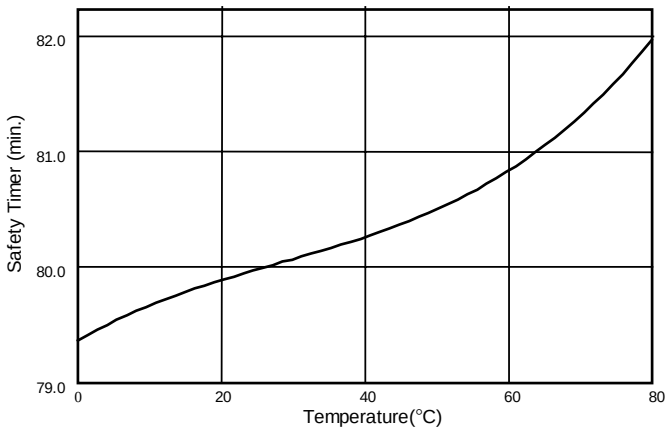

LED Flashing Frequency vs Temperature

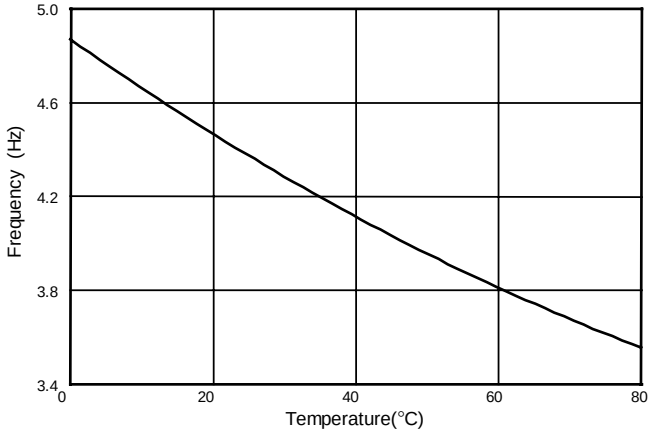

V_{BT} (high) Limit vs Temperature (SEL3>3V)

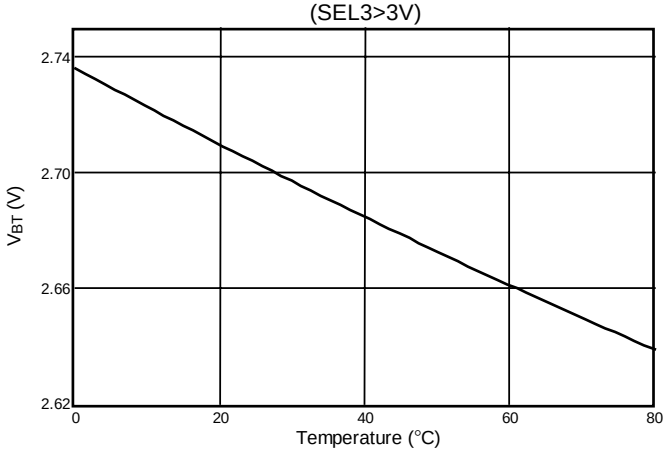

V_{BT} (high) Limit vs Temperature (SEL3<2V)

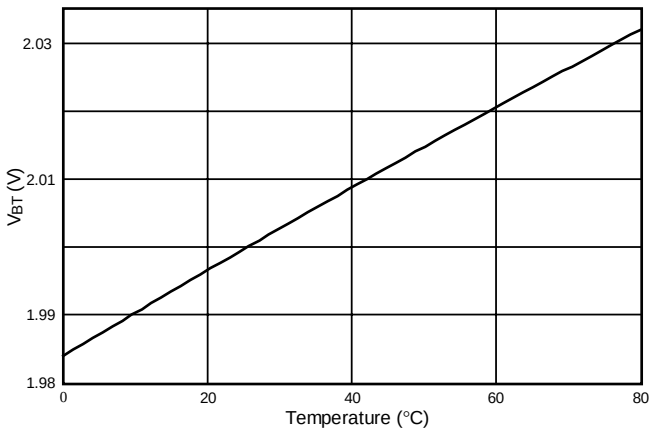

TYPICAL PERFORMANCE CHARACTERISTICS (CONTINUED)

V_{BT} (low) Limit vs Temperature (During Initial Timer)

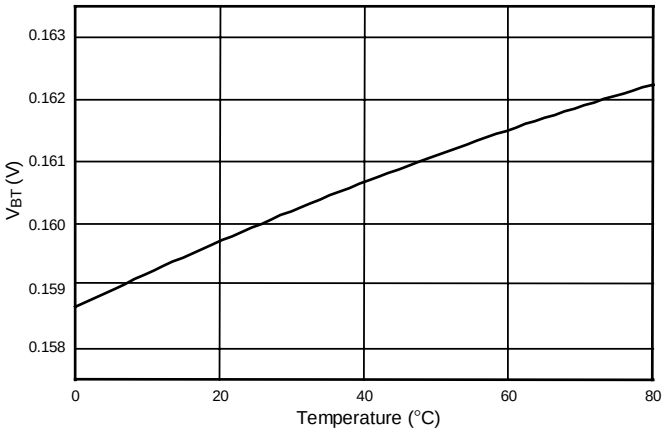

Output Impedance vs Temperature
(LED1,LED2,ICON pins)

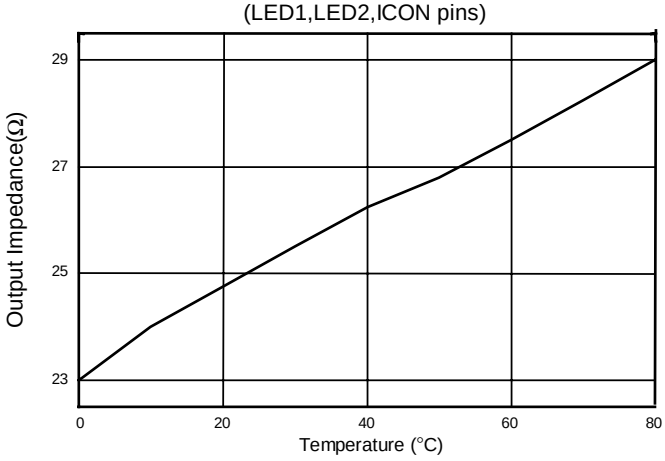

V_{TS} (high) Limit vs Temperature

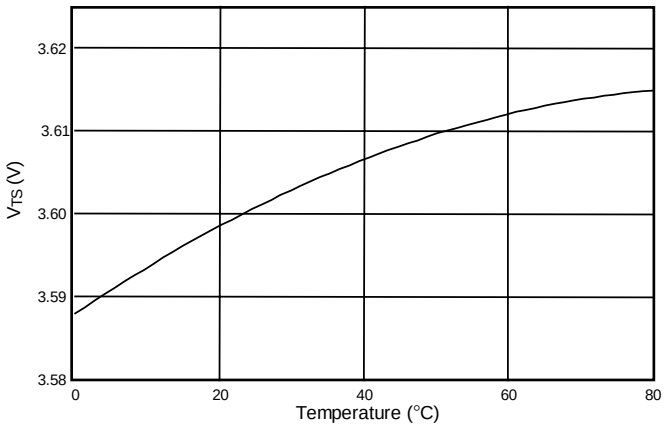

V_{TS} (low) Limit vs Temperature

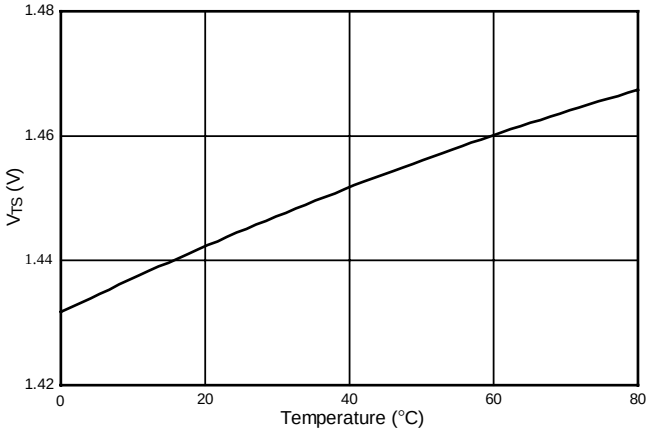

$V_{BT(LOW)}$ Limits vs Temperature
(SEL3>3V, After Initial Timer)

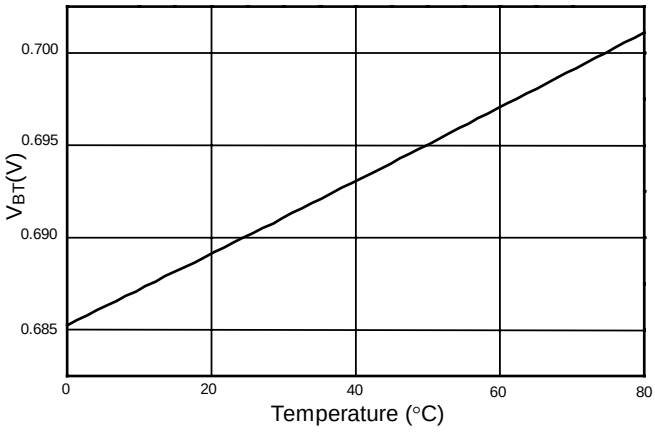

$V_{BT(LOW)}$ Limits vs Temperature
(SEL3<3V, After Initial Timer)

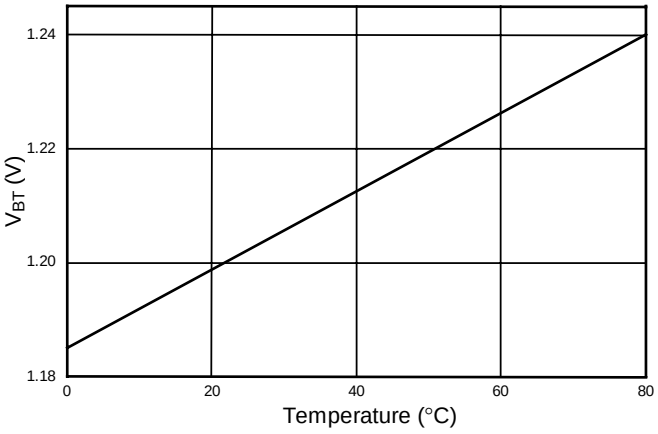

BLOCK DIAGRAM

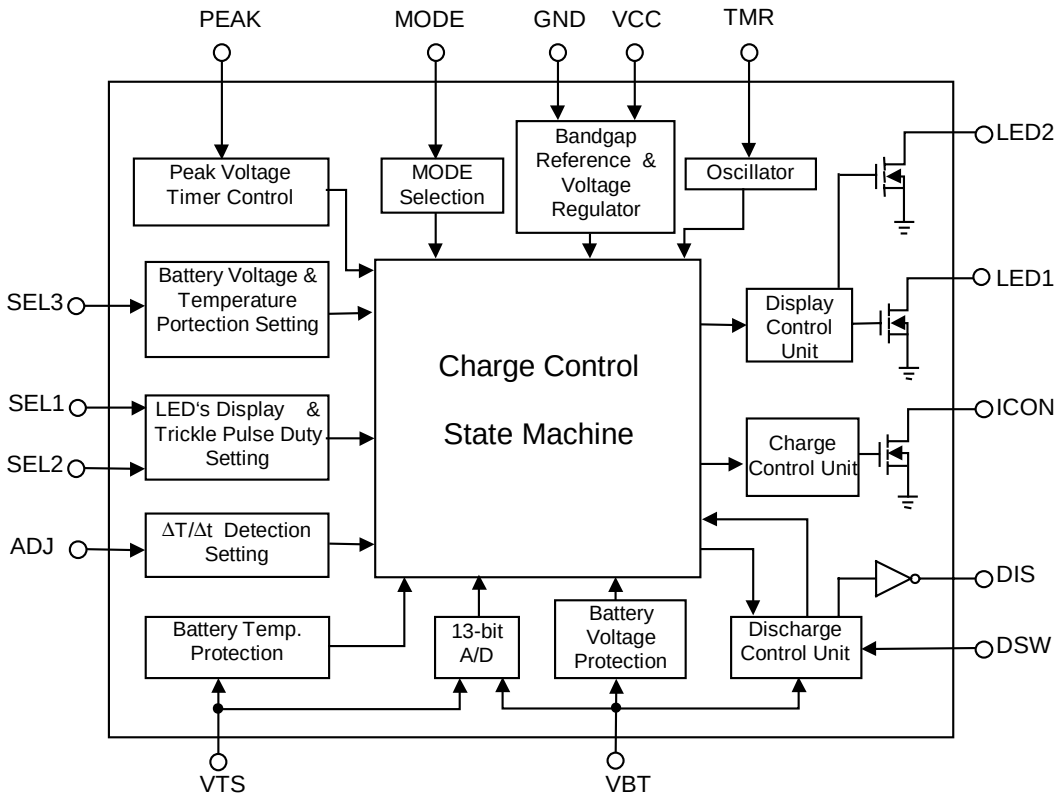

PIN DESCRIPTIONS

PIN 1: PEAK- Tri-level input, determining the period of peak voltage timer. (See 0ΔV cut-off section in application informations.)

PIN 2: VBT- Divided battery voltage input to sense the battery voltage.

PIN 3: DIS- Push-pull output, used to control an external transistor to discharge the battery. DIS is active high when the AIC1781 enters discharge mode.

PIN 4: VTS- The battery cell temperature is represented as a voltage input to the AIC1781 at this pin. The acceptable voltage range of VTS pin is 0.29 VCC to 0.72 VCC. The battery temperature is regarded as too high if the voltage of VTS pin is lower than 0.29 VCC, and is otherwise regarded as too low if the voltage of VTS pin is higher than 0.72 VCC.

PIN 5: VCC- Power supply input at 5V±10%.

PIN 6: ADJ- For adjusting the slope of ΔT/Δt. Acceptable voltage range for this pin is approximately 0.28V to 3.8V. If voltage higher than VCC-0.3V, the function of ΔT/Δt detection is disabled.

PIN 7: SEL3- Determining the acceptable voltage range of VBT pin and mode of temperature protection function.

PIN 8: TMR- Determining the period of safety timer with an external resistor connected to GND.

PIN 9: MODE- Determining the mode of operation for the AIC1781.

PIN 10: SEL2 &
PIN 11: SEL1- Tri-level inputs, that jointly control the LED display mode and the duty of trickle charge after the completion of fast charge.

PIN 12: GND- Power ground.

PIN 13: LED1 &
PIN 14: LED2- Open-drained outputs used to indicate the battery charging status. Two modes of display are available, depending on the setting of SEL1 and SEL2 pins.

PIN 15: ICON- Open-drained output, used to control the charging current to the battery.

PIN 16: DSW- Controlling the function of discharge- before- charge. (See discharge- before- charge subsection in application informations).

APPLICATION INFORMATIONS

● THE AIC1781 OPERATION

Power-on and Battery Prequalifying

When power is first applied to the AIC1781, all internal digital circuit blocks of the AIC1781 are reset by the internal power-on-reset circuitry and output LEDs (depending on the setting of SEL1 and SEL2 pins) flash 3 times to indicate the initiation of power-on. The internal control unit then examines the battery condition through the VBT and VTS pins.

The acceptable limits of VBT pin is determined by the input voltage of SEL3 pin and the acceptable temperature sense voltage window for VTS pin is 0.29 V_{CC} to 0.72 V_{CC}. If the voltage of VBT pin fails to fall within the predetermined acceptable limits, the AIC1781 enters a charge-suspending mode, in which all the internal circuitry remains in reset state. If the voltage of VTS pin is outside the 0.29 V_{CC} to 0.72 V_{CC} window, action of AIC1781 is determined by the input voltage of SEL3 pin.

Discharge-Before-Charge

The AIC1781 provides the function of discharge-before-charge to precondition NiCd batteries which suffer from memory effect. This function can only be activated after the prequalification of battery voltage and temperature, yet before the charge completion is registered for the fast charge cycle.

To trigger this function, DSW pin has to be biased to GND for over 0.18 second. After discharge begins, LED1 and LED2 pins are both off, ICON pin is on, and DIS pin goes high to activate an external circuit to discharge the battery until the voltage of VBT pin falls below 0.9V (or 0.69V, depending on the input voltage of SEL3 pin) or DSW pin is biased to GND for over 0.18 second again. Fast charge will automatically start after discharge is finished. The application circuit is included in TYPICAL APPLICATION CIRCUIT.

Fast Charge

After the battery passes fault checks and required discharging of the battery is completed, fast charging begins while initial timer and safety timer of the AIC1781 start counting. Functions of -ΔV detection, peak voltage timer, $\Delta T / \Delta t$ detection, and maximum battery voltage are, however, disabled temporarily until the initial timer period in the initial stage of a charge cycle elapses. The initial timer period is equal to 1/80 of safety timer.

Since the low limit of acceptable VBT voltage is only about 0.16V during the initial timer period, even deeply discharged batteries can easily qualify to be fast charged subsequently.

In the course of fast charge, the AIC1781 constantly monitors the voltages at VBT and VTS pins. The fast charge process is switched to trickle charge when any one of the following situations is encountered, which are explained below:

- Negative delta voltage (-ΔV)
- Peak voltage timer (0ΔV)
- Delta temperature/ delta time (ΔT/Δt)
- Maximum charge time
- Maximum battery voltage
- Maximum battery temperature

-ΔV Cutoff

The AIC1781 makes a voltage sampling at VBT pin every 4 seconds when safety timer period is set equal to 80 minutes. If a negative delta voltage of 0.25% compared to its peak value is detected at VBT pin, the fast charge cycle is terminated.

0ΔV Cutoff

If the battery voltage stays at its peak value or decreases very slowly for the duration determined by the peak voltage timer, which is in turn determined by PEAK pin voltage, the fast charge action is terminated.

ΔT/Δt Cutoff

The ΔT / Δt detection of the AIC1781 is performed by sensing the decrease of VTS pin voltage in a specific timer interval dictated by the safety timer. The fast charging terminates when the decrease of VTS pin voltage in 56 seconds exceeds the predetermined value set by ADJ pin input. This time interval of 56 seconds is based on the assumption that voltage of VTS pin is sampled once for every 8 seconds, which is also determined by safety timer.

Functioning of -ΔV detection and peak voltage timer (0ΔV) can be disabled if the MODE pin is biased to GND. Functioning of ΔT / Δt detection can be disabled if the voltage of ADJ pin is higher than V_{CC} - 0.3V.

Maximum Safety Timer Cutoff

The maximum fast charge period is determined by the safety timer, which is set by a resistor connected from TMR pin to GND. Safety timer, -ΔV sampling rate, and ΔT / Δt sampling rate will be longer if the resistor value is larger. When the value of the resistor is 100KΩ, the safety timer period equals 80 minutes. This can be verified by biasing MODE pin to V_{CC} and the measured frequency on DSW pin should be around 32.8 KHz. After the safety timer period is finished, the fast charge action is terminated.

Maximum Voltage and Temperature Cutoff

The AIC1781 guards against the maximum limits for battery voltage and temperature during fas charging. If either of these limits is exceeded, fast charge action is terminated.

Trickle Charge

There are five different selectable duty cycles for trickle charge after the fast charge to prevent the loss of charge due to battery self-discharging. The duty cycle is controlled by the setting of SEL1 and SEL2 pins.

The functions and charging states control mentioned above are illustrated in the function flow chart of AIC1781 (Fig. 2)

DESIGN GUIDE

Selecting Peak Voltage Timer (0ΔV)

The period of peak voltage timer is determined by the voltage of PEAK pin along with safety timer. It can be selected according to the following table:

PEAK PIN	PEAK VOLTAGE TIMER
V_{CC}	1.5% of safety timer
Floating	3.7% of safety timer
GND	6% of safety timer

Battery Voltage Measurement

The AIC1781 measures the battery voltage through VBT pin, which is connected to battery positive terminal through a resistor-divider network, as shown in Fig. 3. The acceptable limit of divided battery voltage is determined by the input voltage of SEL3 pin.

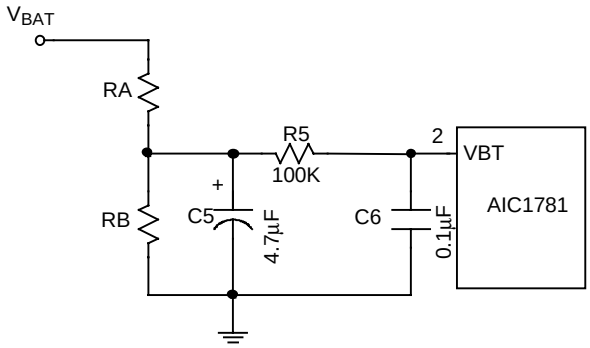

Fig. 3 Battery Voltage Divider

For SEL3 > (V_{CC}/2) + 0.4V, the suggested divider resistance of RA and RB for the corresponding number of battery cells are as below:

BATTERY CELLS	RA/RB	RA (KΩ)	RB (KΩ)
2~4	2	240	120
3~6	3.3	300	91
4~8	4.9	300	62
5~10	6.4	300	47
6~12	7.8	310	39
8~16	10.8	390	36

For SEL3 < (V_{CC}/2) – 0.4V, the suggested divider resistance of RA and RB for the corresponding number of battery cells are as below:

BATTERY CELLS	RA/RB	RA(KΩ)	RB (KΩ)
2	1	240	240
3	2	240	120
4	3	240	80
5	4	300	75
6	5	300	60
8	7	360	51
10	9	360	40
12	11	390	36
16	15	410	27

Battery Temperature Measurement

The AIC1781 employs a negative temperature coefficient (NTC) thermistor to measure the battery's temperature. The thermistor is inherently nonlinear with respect to temperature. To reduce the effect of nonlinearity, a resistor-divider network in parallel with the thermistor is recommended. A typical application circuit is shown in Fig. 4.

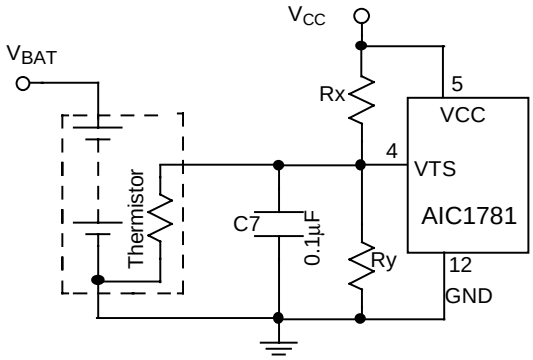

Fig. 4 Battery Temperature Sense Circuit with a Negative Temperature Coefficient (NTC) Thermistor

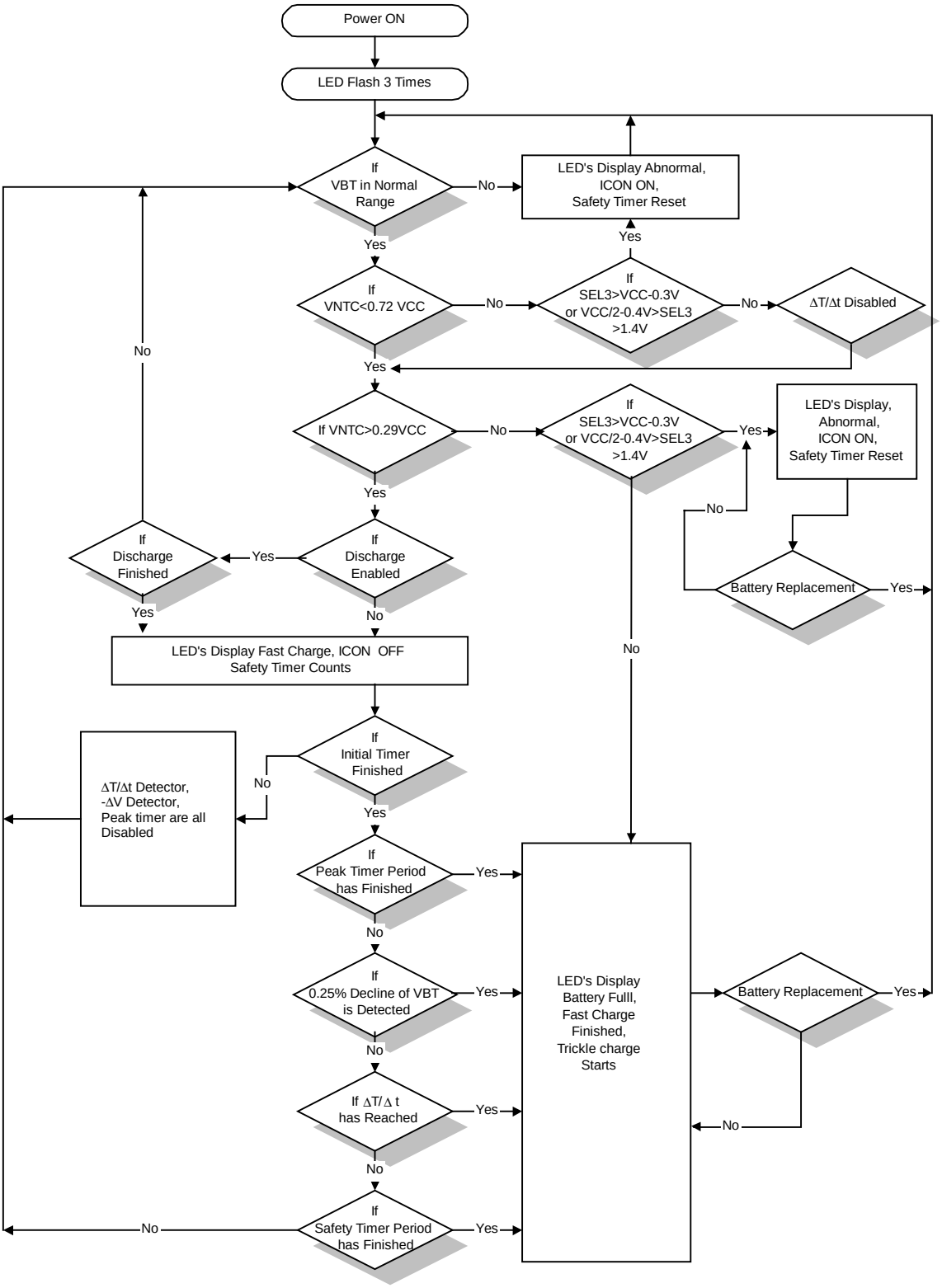

Fig. 2 Function Flow Chart of AIC1781

The calculation for Rx and Ry in the circuit is as following.

$$0.29\ V_{CC} = \frac{Ry//R_{TH}}{Rx + (Ry//R_{TH})}\ x\ V_{CC}$$

R_{TH}= The resistance of thermistor at upper limit of temperature protection.

$$0.72\ V_{CC} = \frac{Ry//R_{TL}}{Rx + (Ry//R_{TL})}\ x\ V_{CC}$$

R_{TL}= The resistance of thermistor at lower limit of temperature protection.

Substitution and rearranging the equations yield

$$Rx = 2.061 \times \frac{R_{TL} \times R_{TH}}{R_{TL} - R_{TH}}$$

$$Ry = \frac{5.3 \times R_{TL} \times R_{TH}}{R_{TL} - 6.3R_{TH}}$$

If temperature characteristic of the thermistor is like that of SEMITEC 103AT-2, the resistance of Rx and Ry is tabulated for different TL and TH as below. (Note: TL is lower temperature limit and TH is upper temperature limit.)

TABLE. 1 Values of Rx and Ry at TL = 0°C

TH (°C)	Rx(KΩ)	Ry (KΩ)
50	10.1	551.1
51	9.7	300.7
52	9.4	204.8
53	9.0	153.9
54	8.7	122.8
55	8.4	101.8
56	8.1	86.5
57	7.8	75.0
58	7.5	66.0
59	7.2	58.7
60	7.0	52.8
61	6.8	47.8
62	6.5	43.6
63	6.3	39.9
64	6.1	36.8
65	5.9	34.0
66	5.7	31.6
67	5.5	29.5
68	5.3	27.5
69	5.2	25.8
70	5.0	24.3

TABLE. 2 Values of Rx and Ry at TL = -10°C

TH (°C)	Rx (KΩ)	Ry (KΩ)
45	11.4	95.6
46	11.0	85.0
47	10.6	76.2
48	10.2	68.9
49	9.8	62.8
50	9.5	57.5
51	9.1	52.9
52	8.8	48.8
53	8.5	45.3
54	8.2	42.1
55	7.9	39.4
56	7.6	36.8
57	7.4	34.6
58	7.1	32.5
59	6.9	30.7
60	6.7	29.0
61	6.4	27.4
62	6.2	26.0
63	6.0	24.6
64	5.8	23.4
65	5.6	22.2

Setting the ADJ Pin Voltage

The slope of $\Delta T/\Delta t$ detection is determined by ADJ pin voltage of the AIC1781.

The calculation of ADJ pin voltage is shown in the following procedure, followed by an example.

Procedure

(a) First, determine the temperature protection limits TH and TL. Then, substitute TH & TL into the following equation:

$$\frac{\Delta V_{TS}}{\Delta T_{BASE}} = \frac{0.72V_{CC} - 0.29V_{CC}}{TH - TL} = \frac{0.43V_{CC}}{TH - TL}$$

(b) Determine the safety timer to obtain the value of Δt_{BASE}.

$$\Delta t_{BASE}(\text{sec.}) = \frac{56(\text{sec.})}{80(\text{min.})} \times \text{Safety Timer (min.)}$$

(c) Determine the expected slope of $\Delta T / \Delta t$ at which temperature rises y°C in x seconds and fast charge is subsequently cut off.

$$\frac{\Delta T}{\Delta t} = \frac{y}{x}$$

(d) Calculate the value of V_{ADJ}

$$V_{ADJ} = 25 \times \frac{\Delta V_{TS}}{\Delta T_{BASE}} \times \frac{\Delta T}{\Delta t} \times \Delta t_{BASE}$$

Example

(a) Let TH=50°C, TL=0°C, V_{CC} =5V. We have

$$\frac{\Delta VTS}{\Delta TBASE} = \frac{0.43 \times 5}{50 - 0} = 0.043V/°C$$

which means that V_{TS} decreases 43mV as temperature rises 1°C.

(b) If safety timer is equal to 80 minutes, Δt_{BASE} is then 56 seconds.

(c) If fast charge should be terminated when temperature rises 1°C in 60 seconds, then

$$\Delta T / \Delta t = \frac{1}{60} = 0.0166$$

(d) V_{ADJ} =25 x 0.043x 0.0166 x 56 = 1(V)

If the temperature range is from 0°C to 50°C, the voltage of V_{ADJ} under different setting conditions should be set as tabulated below.

TABLE. 3 ADJ pin Voltage (TL=0°C, TH=50°C)

S.T. \ ΔT / Δt	0.75 (°C/min.)	1.0 (°C/min.)	1.25 (°C/min.)
40 min. (2C)	0.37	0.5	0.63
80 min. (1C)	0.75	1.0	1.25
120 min. (0.67C)	1.12	1.5	1.87
160 min. (0.5C)	1.5	2.0	2.5
200 min. (0.4C)	1.87	2.5	3.12
240 min. (0.33C)	2.25	3.0	3.75

A similar table for temperature range from 0°C to 60°C is as below.

TABLE. 4 ADJ Pin Voltage (TL=0°C, TH=60°C)

S.T. \ ΔT / Δt	0.75 (°C/min.)	1.0 (°C/min.)	1.25 (°C/min.)
40 min. (2C)	0.31	0.42	0.52
80 min. (1C)	0.62	0.84	1.05
120 min. (0.67C)	0.94	1.25	1.56
160 min. (0.5C)	1.25	1.67	2.08
200 min. (0.4C)	1.56	2.08	2.60
240 min. (0.33C)	1.87	2.5	3.12

VBT Range and Temperature Protection

The acceptable voltage range of VBT pin and mode of temperature protection function is determined by the voltage of SEL3 pin, shown as the following:

(a) **SEL3 > V_{CC} - 0.3V**
Acceptable VBT Range:
before initial timer: 0.16V~2.7V
after initial timer: 0.69V~2.7V

Temperature Protection Mode:

Entering charge-suspending mode when temperature is either too low or too high, same as abnormal battery voltage. Latch for charge-suspending function is provided for high temperature protection, but not for low temperature protection.

(b) V_{CC} **- 1.4V> SEL3 >** $\frac{V_{CC}}{2}$ **- 0.4V**

Acceptable VBT Range:
before initial timer: 0.16V~2.7V
after initial timer: 0.69V~2.7V

Temperature Protection Mode:

If temperature is too high, battery charging is regarded as completed. If temperature is too low, function of ΔT/Δt detection is disabled, just as thermistor is not existing.

(c) $\frac{V_{CC}}{2}$ **- 0.4V>SEL3 >1.4V**

Acceptable VBT Range:
before initial timer: 0.16V~2V
after initial timer: 1.2V~2V

Temperature Protection Mode:

Entering charge-suspending mode when temperature is either too low or too high, same as abnormal battery voltage. Latch for charge-suspending function is provided for high temperature protection, but not for low temperature protection.

(d) 0.3V> SEL3

Acceptable VBT Range:
before initial timer: 0.16V~2V
after initial timer: 1.2V~2V

Temperature Protection Mode:

If temperature is too high, battery charging is regarded as completed. If temperature is too low, function of ΔT/Δt detection is disabled, just as thermistor is not existing.

Setting the Period of Safety Timer

The AIC1781 provides a method for linearly adjusting the period of safety timer with an external resistor connected from TMR pin to GND. The relation between safety timer length and the external resistor (R_{TMR}) is shown in Fig. 5. The table following shows the resistor values for some of the commonly chosen safety timer periods. Also shown in the table is their corresponding oscillator frequencies.

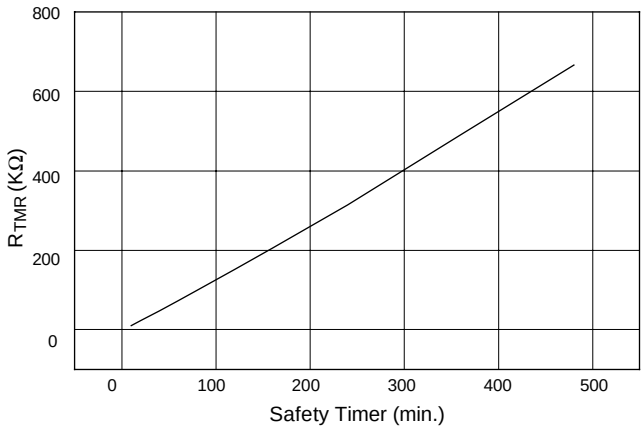

Fig. 5 Safety Timer vs R_{TMR}

R_{TMR} (KΩ)	OSC. Freq.(KHz)	Safety timer (min.)
11	262.4	10
23	131.2	20
48	65.6	40
74	43.7	60
100	32.8	80
152	21.9	120
206	16.4	160
314	10.9	240
491	7.3	360
667	5.5	480

Selecting Mode of Operation

The AIC1781 provides three modes of operation: normal, test, and AC mode, determined by the setting of MODE pin according to TABLE 5. The AIC1781 will operate normally when the MODE pin is left floating (a 0.1μF capacitor is recommended to be tied to MODE pin if the charge circuit works in a noisy environment). When the MODE pin is biased to GND, the function of -ΔV detection is disabled. When the MODE pin is biased to V_{CC}, the AIC1781 enters the test mode. The test mode can be used to significantly reduce production test time. For relevant informations please contact AIC directly.

TABLE. 5 The Operating Mode of AIC1781

MODE pin	Mode	Function
VCC	Test	Safety timer period scaled down to 1/32....etc.
Floating	Normal	Normal operation
GND	AC	$-\Delta V$ detection disabled

The Mode of LED Display and Trickle Charge

The AIC1781 provides two LED display modes and five-pulsed trickle charge modes. The tri-level inputs, SEL1 and SEL2 pins, as in the TABLE 6 determine the modes of LED display and trickle charge.

TABLE. 6 Mode of LED Display and Trickle Charge

SEL1	SEL2	Trickle Charge Duty	LED Display Mode
V_{CC}	V_{CC}	N/A	Type 1
	Floating	1/32	Type 1
	GND	1/64	Type 1
Floating	V_{CC}	1/128	Type 1
	Floating	1/256	Type 1
	GND	N/A	Type 2
GND	V_{CC}	1/32	Type 2
	Floating	1/64	Type 2
	GND	1/128	Type 2

Display the Battery Charging Status

The AIC1781 provides two open-drained outputs, LED1 and LED2, to indicate the battery charging status. Refer to the table of LED display mode (TABLE 6), depending on the setting of SEL1 and SEL2 pins, the outputs of LED1 and LED2 pins are shown in the following table:

TYPE 1

	Power ON	Fast Charging	Charge Completed	Fault Conditions
LED1	1Hz	ON	OFF	OFF
LED2	OFF	OFF	ON	OFF

TYPE 2

	Power ON	Fast Charging	Charge Completed	Fault Conditions
LED1	1Hz	ON	OFF	4Hz Flashing
LED2	1Hz	4Hz Flashing	ON	OFF

Charging Current Control

As shown in the typical application circuit, the AIC1781 offers an open-drained output pin, ICON pin, to control the charging current flow in fast charge state and switch on to inhibit the charging current flow in fault conditions. When fast charge is completed, the AIC1781 enters the trickle charge mode. In trickle charge mode, the ICON pin output switches with predetermined duty cycle. Refer to the table of trickle charge mode (TABLE 6), the duty cycle is determined by the setting of SEL1 and SEL2 pins. The following table summarizes how ICON pin corresponds to various charging states.

	Power ON	Fast Charging	Charge Completed	Fault Conditions
ICON	ON	OFF	See pin 10 & 11	ON

Test Mode

Fig. 6 shows the timing diagram for externally controlled PEAK, ADJ, VBT, VTS, SEL1 and SEL2 pin voltages of a recommended AIC1781 test scheme, utilizing TEST mode function. Output waveforms of LED1, LED2 and ICON of a properly functioning AIC1781 are also shown in the figure.

For detailed informations please consult with AIC staffs directly.

TIMING DIAGRAM

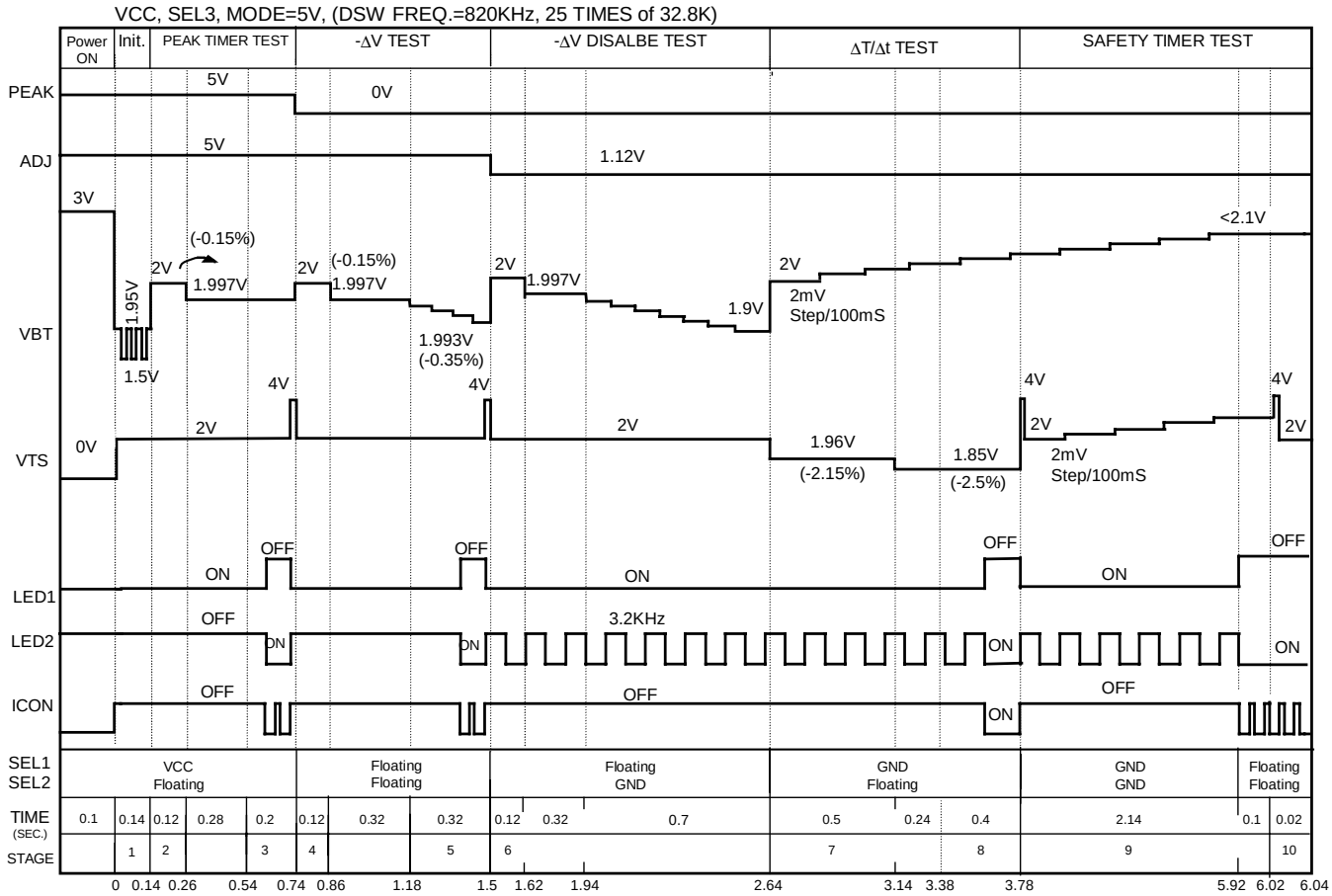

Fig. 6 Timing Diagram of AIC1781 in Test Mode

■ APPLICATION EXAMPLES

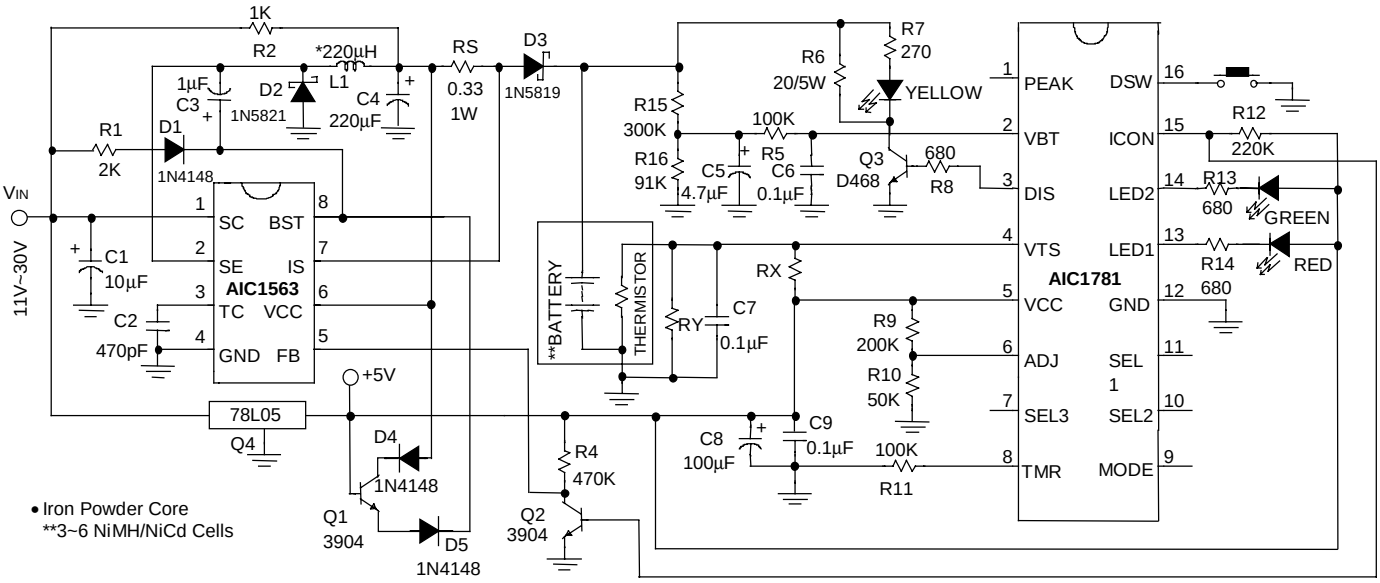

NOTE : CHARGE CURRENT = 0.3V/RS Amper.
SAFETY TIMER = 80 min.
ΔT/Δt=1°C/min.

Fig. 7 Battery charge Circuit with Wide Input Voltage Range

■ PHYSICAL DIMENSIONS

- **16 LEAD PLASTIC DIP**

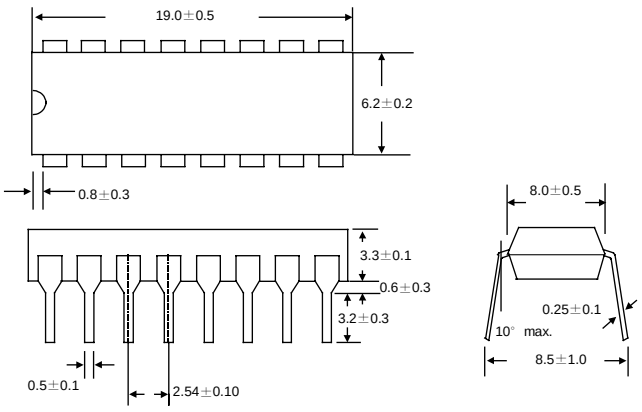

- **16 LEAD PLASTIC SO (WIDE BODY)**

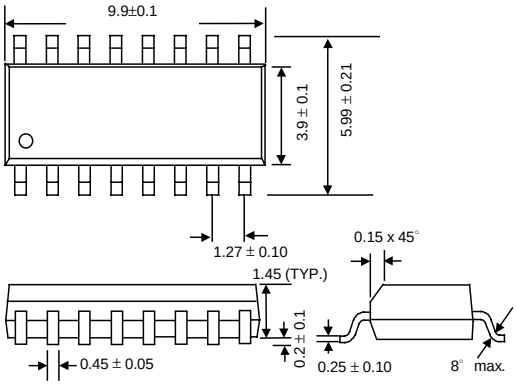

UNIT: mm