SPEC NO: DS-1580-00 05/16/00

FEATURES

- Operation Voltage up to 15V.
- Simple Voltage-Mode PWM Control.
- Fast Transient Response.
- 2V and 1.3V ± 2% Feedback Voltage Reference Option.
- Adjustable Current Limit without External Sense Resistors.
- 200KHz Free-Running Oscillator.
- Short-Circuit Protection with Low Short Circuit Output Current.
- Low Shutdown Current
- Built-in Soft Start.

APPLICATIONS

- Power Supply for Motherboard V_{GTL} (1.5V Output)
- Power Supply for Motherboard $V_{I/O}$.
- High-Power 5V to 3.xV DC/DC Regulators.
- Low-Voltage Distributed Power Supplies.

DESCRIPTION

The AIC1580 is a high-power, high-efficiency voltage-mode switching regulator controller for motherboard $V_{I/O}$ power supply applications. Designed to drive an N-channel MOSFET in a standard buck topology, the AIC1580 features a high voltage CMOS output driver, short-circuit protection, and 8-pin package.

An external 4-bit Digital-to-Analog Converter (DAC) can be used along with the AIC1580 to adjust the output voltage from 2.0V to 3.5V in 0.1V increments. Table 1 on the following page specifies the corresponding output voltage for 16 combinations of DAC inputs as in the typical application circuit.

The 200KHz switching frequency allows for using small external components while maintaining high conversion efficiency. The 11MHz bandwidth and 6V/µS slew rate of the error amplifier ensures high converter bandwidth and fast transient response.

The AIC1580 provides adjustable overcurrent and short-circuit protections by sensing the output current across the on resistance of the external N-channel MOSFET rather than an external low value sense resistor.

The AIC1580L provides lower reference voltage (1.30V) than the default (2.00V, AIC1580) for lower V_{OUT} requirement.

ORDERING INFORMATION

AIC1580 XXX

- PACKAGE TYPE
  - N: PLASTIC DIP
  - S: SMALL OUTLINE
- TEMPERATURE RANGE
  - C=0°C~+70°C
- REFERENCE VOLTAGE
  - DEFAULT: 2.00V
  - L: 1.30V

ORDER NUMBER	PIN CONFIGURATION
AIC1580CN AIC1580LCN (PLASTIC DIP)	TOP VIEW OCSET 1, SD 2, COMP 3, FB* 4, 8 VCC, 7 UGATE, 6 PHASE, 5 GND *AIC1580: 2.00V AIC1580L: 1.30V
AIC1580CS AIC1580LCS (PLASTIC SO)	

TYPICAL APPLICATION CIRCUIT

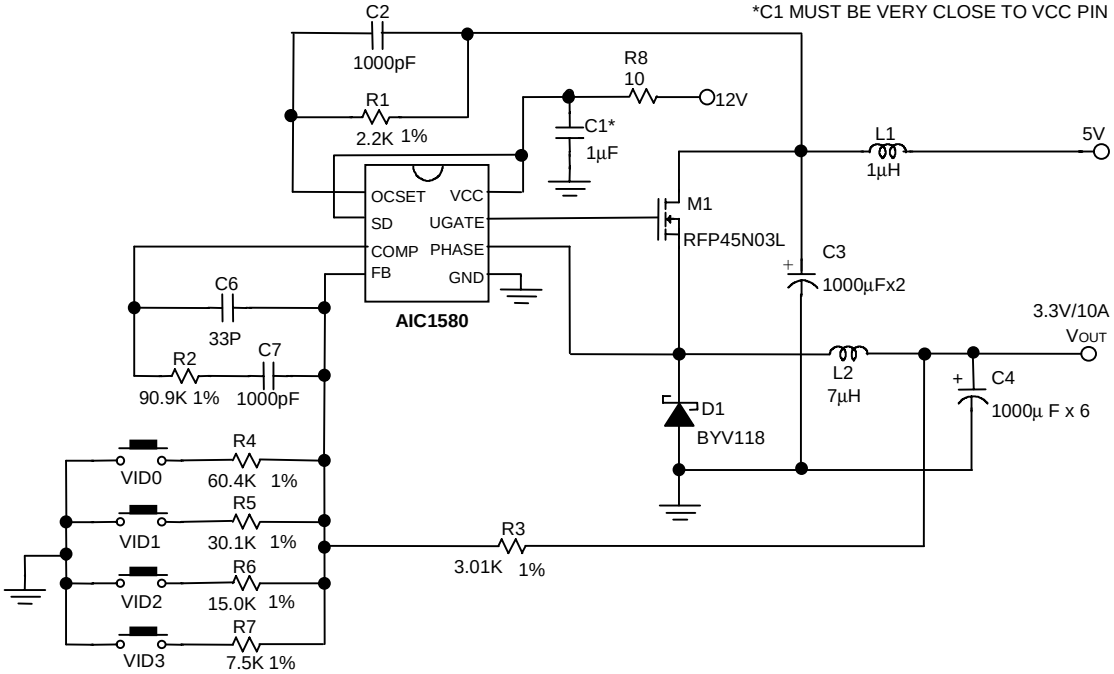

Switching Regulator for Pentium® V_{CORE} Supply

Table 1. Output Voltage Program

VID3	VID2	VID1	VID0	VOUT
1	1	1	1	2.00V
1	1	1	0	2.10V
1	1	0	1	2.20V
1	1	0	0	2.30V
1	0	1	1	2.40V
1	0	1	0	2.50V
1	0	0	1	2.60V
1	0	0	0	2.70V
0	1	1	1	2.80V
0	1	1	0	2.90V
0	1	0	1	3.00V
0	1	0	0	3.10V
0	0	1	1	3.20V
0	0	1	0	3.30V
0	0	0	1	3.40V
0	0	0	0	3.50V

ABSOLUTE MAXIMUM RATINGS

Supply Voltage, V_{CC} 15V
Input, Output, or I/O Voltage ..... GND -0.3V to VCC+0.3V
ESD Classification ..... Class 2

Recommended Operating Conditions

Supply Voltage, V_{CC} ..... 12V ±10%
Ambient Temperature Range ..... 0°C~70°C
Junction Temperature Range ..... 0°C~ 100°C

Thermal Information

Thermal Resistance, θ_{JA} (Typical, Note 1)
SOIC Package ..... 100°C/W
SOIC Package (with 3 in^2 of Copper) ..... 90°C/W
Maximum Junction Temperature (Plastic Package) ..... 150°C
Maximum Storage Temperature Range ..... –65°C~150°C
Maximum Lead Temperature (Soldering 10 Sec) ..... 300°C
Note 1: θ_{JA} is measured with the component mounted on an evaluation PC board in free air.

TEST CIRCUIT

Refer to TYPICAL APPLICATION CIRCUIT.

ELECTRICAL CHARACTERISTICS (VCC= 12V, Ta=25°C, unless otherwise specified.)

PARAMETER	TEST CONDITIONS	SYMBOL	MIN.	TYP.	MAX.	UNIT
VCC Supply Current						
Nominal Supply	UGATE Open	I_{VCC}		2		mA
Power-On Reset						
V_{CC} Threshold	V_{OCSET}=4.5V			9.5		V
Oscillator						
Frequency				200		KHz
Duty Cycle				84		%
Internal Reference Voltage						
Reference Voltage	AIC1580 AIC1580L		1.96 1.27	2.00 1.30	2.04 1.33	V
Error Amplifier						
DC Gain				76		dB
Gain-Bandwidth Product		GBW		11		MHz
Slew Rate		SR		6		V/µS

ELECTRICAL CHARACTERISTICS (Continued)

PARAMETER	TEST CONDITIONS	SYMBOL	MIN.	TYP.	MAX.	UNIT
Gate Driver						
Upper Gate Source		R_{UGATE}		8		Ω
Upper Gate Sink		R_{UGATE}		5.5		Ω
Protection						
OCSET Current Source	V_{OCSET} =4.5VDC	I_{OCSET}		200		μA
SS Current		I_{SS}		10		μA
Shutdown						
Shutdown Threshold		V_{SD}		1.5		V
Shutdown Mode Current					15	μA

PIN DESCRIPTIONS

PIN 1: OCSET - Current limit sense pin. Connect a resistor R_{OCSET} from this pin to the drain of the external MOSFET. R_{OCSET}, an internal 200μA current source (I_{OCSET}), and the external MOSFET on-resistance ($R_{DS(ON)}$) jointly set the overcurrent trip point according to the following equation:

$$I_{PEAK} = \frac{I_{OCSET} \times R_{OCSET}}{R_{DS(ON)}}$$

If FB pin voltage is sensed to be below 50% of the internal voltage reference VDAC, the overcurrent comparator cycles the soft-start function.

PIN 2: SD - Shutdown pin. Connect this pin to ground for shutdown.

PIN 3: COMP - External compensation pin. This pin is connected to error amplifier output and PWM comparator. A RC network is connected to FB pin to compensate the voltage-control feedback loop of the converter.

PIN 4: FB - The error amplifier inverting input pin. The FB pin and COMP pin are used to compensate the voltage-control feedback loop.

PIN 5: GND- Ground pin.

PIN 6: PHASE- Overcurrent detection pin. Connect the PHASE pin to source of the external N-MOSFET. This pin detects the voltage drop across the MOSFET $R_{DS(ON)}$ for overcurrent protection.

PIN 7: UGATE- External MOSFET gate drive pin. Connect this pin to gate of the external MOSFET.

PIN 8: VCC -The chip power supply pin. Recommended supply voltage is 12V.

APPLICATION CIRCUIT

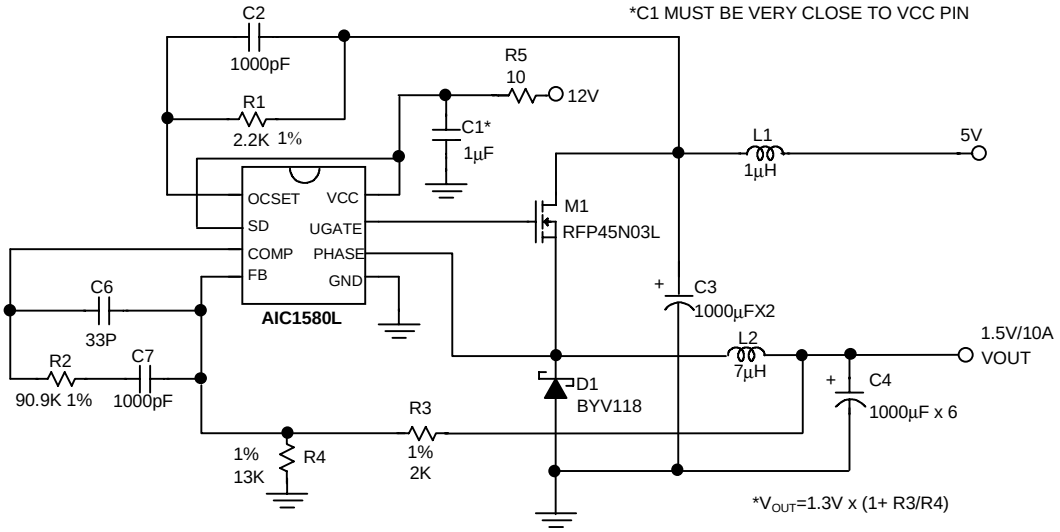

PHYSICAL DIMENSIONS

- **8 LEAD PLASTIC SO (unit: mm)**

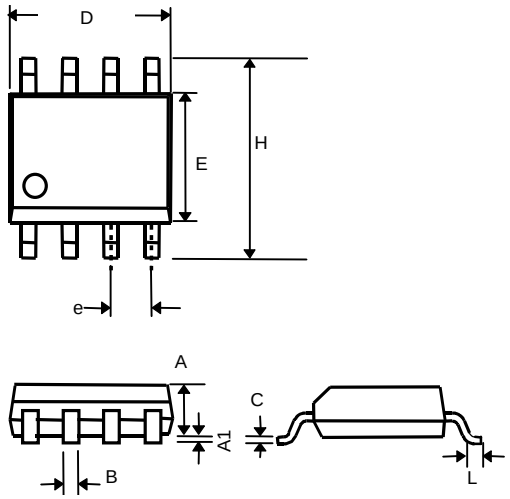

SYMBOL	MIN	MAX
A	1.35	1.75
A1	0.10	0.25
B	0.33	0.51
C	0.19	0.25
D	4.80	5.00
E	3.80	4.00
e	1.27(TYP)	
H	5.80	6.20
L	0.40	1.27

- **8 LEAD PLASTIC DIP (unit: mm)**

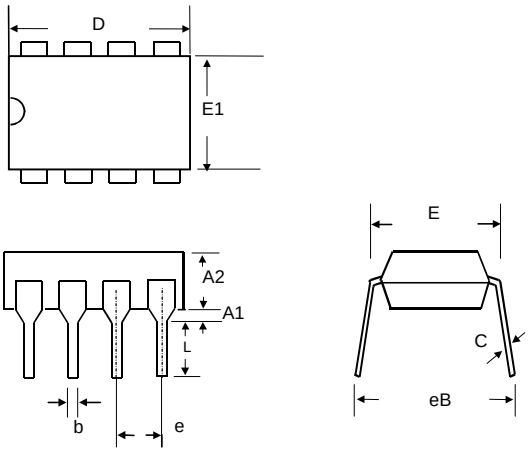

SYMBOL	MIN	MAX
A1	0.381	—
A2	2.92	4.96
b	0.35	0.56
C	0.20	0.36
D	9.01	10.16
E	7.62	8.26
E1	6.09	7.12
e	2.54 (TYP)	
eB	—	10.92
L	2.92	3.81